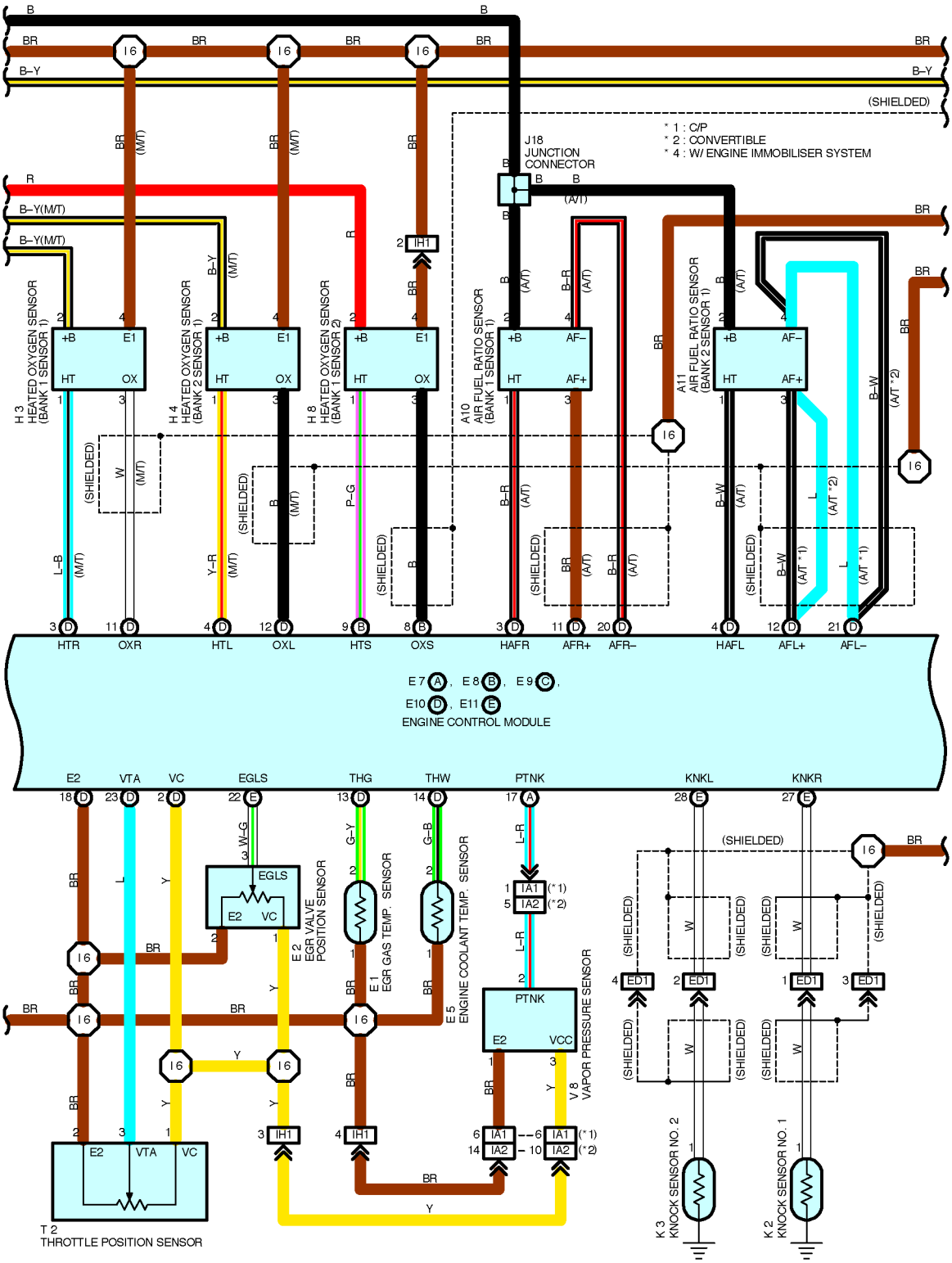
* 1 : C/P
* 2 : CONVERTIBLE
* 4 : W/ ENGINE IMMOBILISER SYSTEM
J18
JUNCTION
CONNECTOR
H 3
HEATED OXYGEN SENSOR
(BANK 1 SENSOR 1)
H 4
HEATED OXYGEN SENSOR
(BANK 2 SENSOR 1)
H 8
HEATED OXYGEN SENSOR
(BANK 1 SENSOR 2)
A10
AIR FUEL RATIO SENSOR
(BANK 1 SENSOR 1)
A11
AIR FUEL RATIO SENSOR
(BANK 2 SENSOR 1)
HTR
OXR
HTL
OXL
HTS
OXS
HAFR
AFR+
AFR–
HAFL
AFL+
AFL–
E7, E8, E9,
E10, E11
ENGINE CONTROL MODULE
E2
VTA
VC
EGLS
THG
THW
PTNK
KNKL
KNKR
E 2
EGR VALVE
POSITION SENSOR
E 1
EGR GAS TEMP. SENSOR
E 5
ENGINE COOLANT TEMP. SENSOR
V 8
VAPOR PRESSURE SENSOR
T 2
THROTTLE POSITION SENSOR
K 3
KNOCK SENSOR NO. 2
K 2
KNOCK SENSOR NO. 1